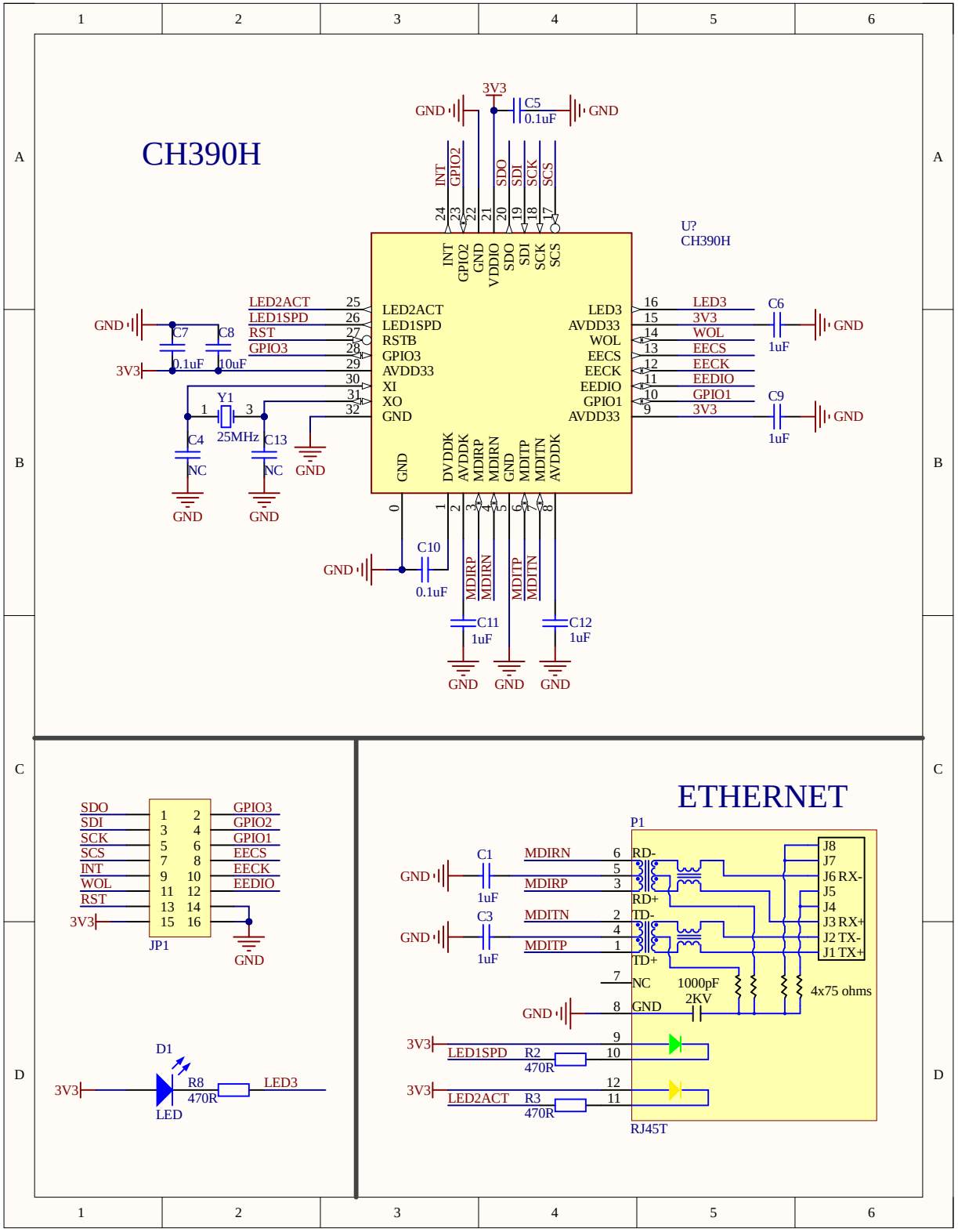
CH390H
U?
CH390H
3V3
GND
C5
0.1uF
INT
GPIO2
SDO
SDI
SCK
SCS
LED2ACT
LED1SPD
RST
GPIO3
AVDD33
XI
XO
GND
LED3
WOL
EECS
EECK
EEDIO
GPIO1
DVDDK
MDIRP
MDIRN
MDITP
MDITN
C6
C9
1uF
C7
C8
0.1uF
10uF
Y1
25MHz
C4
C13
NC
C10
0.1uF
C11
C12
1uF
ETHERNET
P1
RJ45T
C1
C3
MDIRN
MDIRP
MDITN
MDITP
RD-
RD+
TD-
TD+
NC
1000pF
2KV
4x75 ohms
J8
J7
J6 RX-
J5
J4
J3 RX+
J2 TX-
J1 TX+
R2
R3
470R
LED1SPD
LED2ACT
JP1
D1
R8
LED

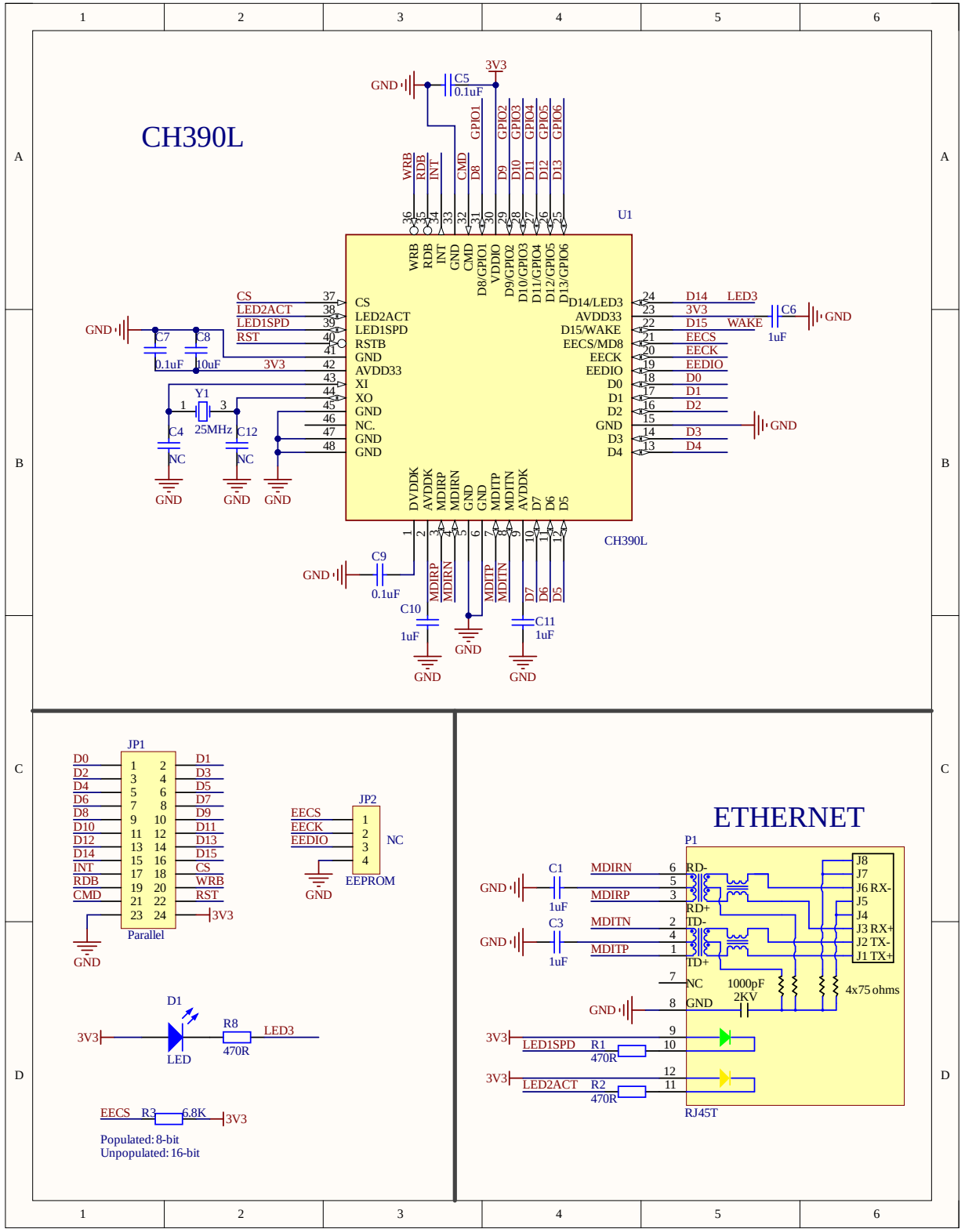
CH390L
U1
CH390L
3V3
GND
C5
0.1uF
C6
1uF
C7
0.1uF
C8
10uF
Y1
25MHz
C4
NC
C12
NC
C9
0.1uF
C10
1uF
C11
1uF
CS
LED2ACT
LED1SPD
RST
WRB
RDB
INT
CMD
GPIO1
GPIO2
GPIO3
GPIO4
GPIO5
GPIO6
D8
D9
D10
D11
D12
D13
D14
D15
WAKE
LED3
EECS
EECK
EEDIO
D0
D1
D2
D3
D4
D5
D6
D7
MDIRP
MDIRN
MDITP
MDITN
JP1
Parallel
JP2
EEPROM
NC
ETHERNET
P1
RJ45T
C1
1uF
C3
1uF
RD-
RD+
TD-
TD+
NC
GND
1000pF
2KV
4x75 ohms
J8
J7
J6 RX-
J5
J4
J3 RX+
J2 TX-
J1 TX+
D1
LED
R8
470R
R1
470R
R2
470R
R3
6.8K
Populated: 8-bit
Unpopulated: 16-bit